# 496.3.570

## Vacuum cleaner motor performance

DOMEL®

Vacuum cleaner motors 496.3.570 / 1100W / 240V / 50Hz are used for dry aspiration. Technical data and dimensions are given in the table. Vacuum motors consist of universal commutator motor and two fan stage. The rotor is supported with two ball bearings enabling vertical or horizontal installation of motor The motor is designed for insulation class 130(B) and constructed according to EN 60335-1.

## Technical data:

| | | | | |
|---|---|---|---|---|
| Normal operation: | $P_m$ | >= | 1240 | W |
| Vacuum: | $p_{max}$ | >= | 21<br>84,3 | kPa<br>in $H_2O$ |
| Air Flow at φ50: | $Q_{\varphi 50}$ | >= | 54<br>115 | $dm^3/s$<br>CFM |
| Air Power: | $P_{2max}$ | >= | 400 | W |
| Efficiency: | $\eta_{max}$ | >= | 33 | % |
| Mass: | m | = | 2,25 | kg |

| | |
|---|---|
| Voltage: | 240 V |
| Frequency: | 50 Hz |
| Nominal Power: | 1100 W |

## Max. power 1300W

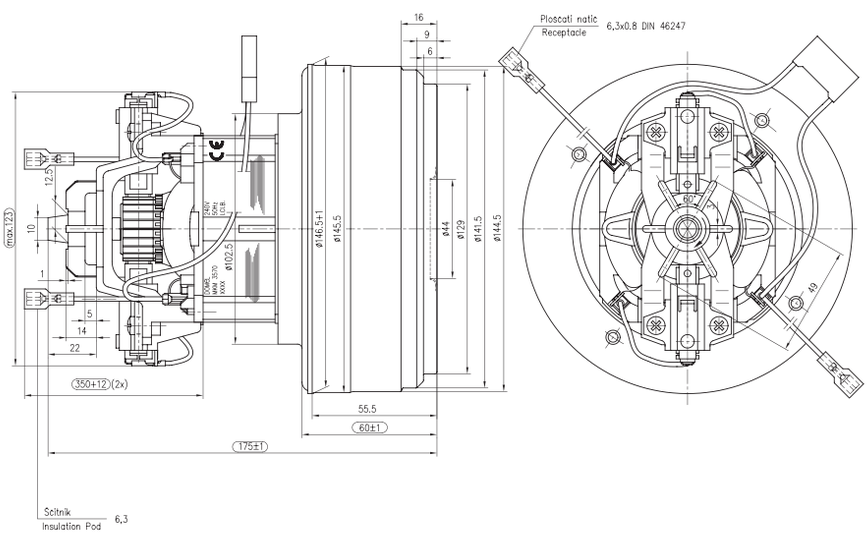


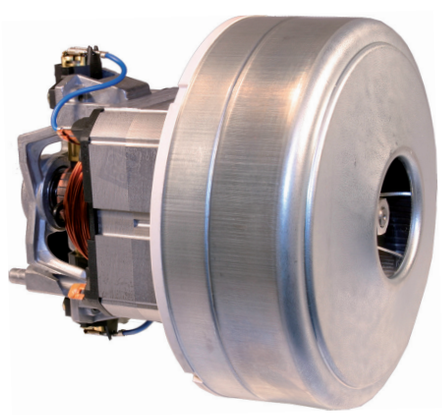

Dimensional and performance data are subject to change without notice.

| Orifice | | Current | Input Power | Speed | Pressure | | Air Flow | | Air power | Efficiency |
|---|---|---|---|---|---|---|---|---|---|---|
| mm | in* | A | W | $min^{-1}$ | kPa | in $H_2O$ | $dm^3/s$ | CFM | W | % |
| 50 | 2 | 0,00 | 0 | 0 | 0,0 | 0,0 | 0,0 | 0,0 | 0 | 0,0 |
| 40 | 1 1/2 | 5,74 | 1301 | 20142 | 2,9 | 15,2 | 52,1 | 107,9 | 153 | 11,8 |
| 30 | 1 1/8 | 5,70 | 1293 | 20135 | 7,3 | 33,6 | 45,9 | 92,3 | 336 | 26,0 |
| 23 | 7/8 | 5,37 | 1221 | 20640 | 12,4 | 51,7 | 34,6 | 69,7 | 427 | 35,0 |
| 19 | 3/4 | 5,02 | 1145 | 21297 | 15,1 | 60,4 | 25,9 | 55,1 | 390 | 34,1 |
| 16 | 5/8 | 4,66 | 1070 | 21995 | 17,0 | 68,6 | 19,5 | 40,7 | 331 | 31,0 |
| 13 | 1/2 | 4,26 | 983 | 22769 | 18,6 | 75,1 | 13,4 | 27,3 | 249 | 25,4 |
| 10 | 3/8 | 3,85 | 892 | 23750 | 20,0 | 80,8 | 8,2 | 16,1 | 164 | 18,4 |
| 6 | 1/4 | 3,40 | 794 | 25031 | 21,2 | 85,4 | 3,6 | 7,5 | 77 | 9,7 |
| 0 | 0 | 3,03 | 711 | 26258 | 22,8 | 91,7 | 0,0 | 0,0 | 0 | 0,0 |

Data above represent the preformance of an average motor sample. Individual data may vary due to normal manufacturing variations.
* Orifice in inch is only approximative.